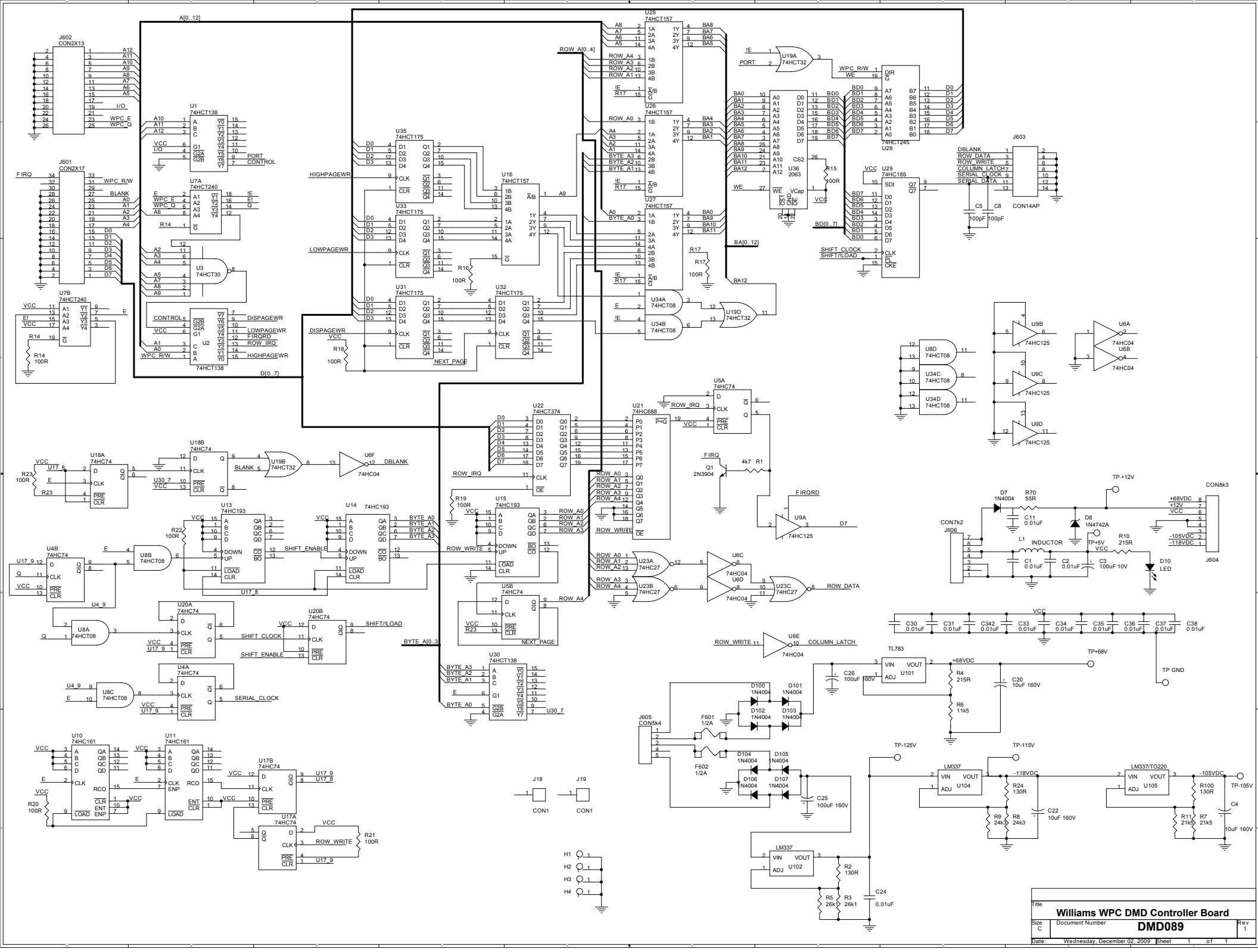
Williams WPC DMD Controller Board
DMD089
Rev 1
Size C
Document Number
Date: Wednesday, December 02, 2009
Sheet 1 of 1
J602 CON2X13
J601 CON2X17
U1 74HCT138
U7A 74HCT240
U3 74HCT30
U7B 74HCT240
U2 74HCT138
U35 74HCT175
U33 74HCT175
U31 74HCT175
U32 74HCT175
U16 74HCT157
U25 74HCT157
U26 74HCT157
U27 74HCT157
U34A 74HCT08
U34B 74HCT08
U19D 74HCT32
U19A 74HCT32
U36 2063
U28 74HC1245
U29 74HC165
J603 CON14AP
U8D 74HCT08
U34C 74HCT08
U34D 74HCT08
U9B 74HC125
U9C 74HC125
U9D 74HC125
U6A 74HC04
U6B 74HC04
U18A 74HC74
U18B 74HC74
U19B 74HCT32
U6F 74HC04
U13 74HC193
U14 74HC193
U15 74HC193
U22 74HCT374
U21 74HC688
U5A 74HC74
U9A 74HC125
U4B 74HC74
U8B 74HCT08
U20A 74HC74
U20B 74HC74
U5B 74HC74
U23A 74HC27
U23B 74HC27
U6C 74HC04
U6D 74HC04
U23C 74HC27
U8A 74HCT08
U4A 74HC74
U8C 74HCT08
U30 74HCT138
U10 74HC161
U11 74HC161
U17B 74HC74
U17A 74HC74
J605 CON5k4
J606 CON7k2
J604 CON8k3
TL783 U101
LM337 U104
LM337 U105
LM337 U102
LM337/TO220
TP +12V
TP+68V
TP GND
TP-125V
TP-115V
TP-105V
+68VDC
-118VDC
-105VDC
+12V
VCC
TP+5V
INDUCTOR
LED
J18 CON1
J19 CON1
H1
H2
H3
H4